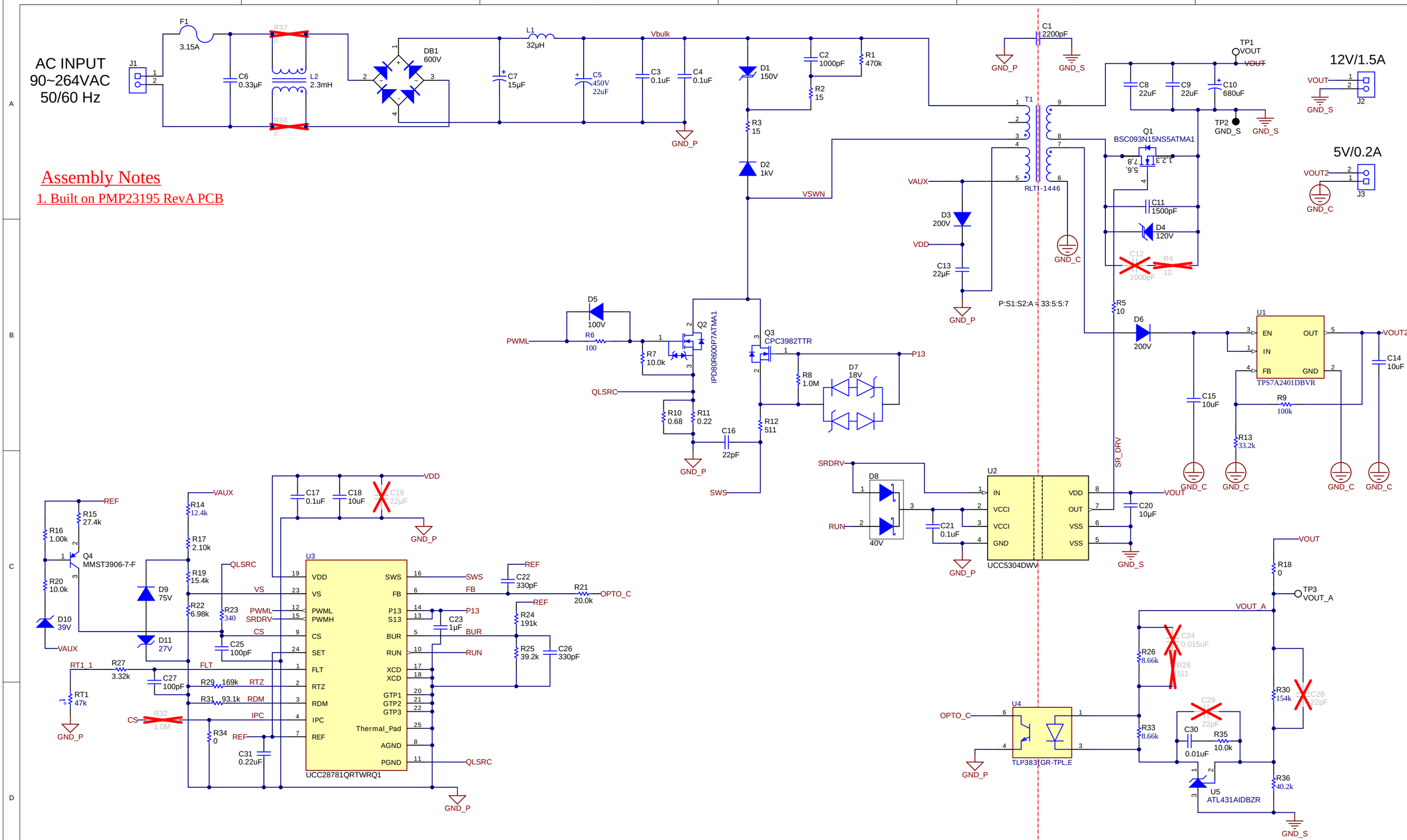

Assembly Notes

1. Built on PMP23195 RevA PCB

Orderable: UCC28781EVM-053	Designed for: Public Release	Mod. Date: 10/19/2022	
TID #: N/A	Project Title: ZVS Aux Flyback		
Number: PMP23195 Rev: B	Sheet Title:		
SVN Rev: Not in version control	Assembly Variant: 001	Sheet: 1 of 2	
Drawn By: U. Goerke	File: PMP23195.schdoc	Size: B	
Engineer: Ben Lough	Contact: http://www.ti.com/support		

Texas Instruments and/or its licensors do not warrant the accuracy or completeness of this specification or any information contained therein. Texas Instruments and/or its licensors do not warrant that this design will meet the specifications, will be suitable for your application or fit for any particular purpose, or will operate in an implementation. Texas Instruments and/or its licensors do not warrant that the design is production worthy. You should completely validate and test your design implementation to confirm the system functionality for your application.

Texas Instruments
http://www.ti.com
© Texas Instruments 2022